Register your product and get support at

# www.philips.com/welcome

AC4064, AC4062, AC4054, AC4052

PHILIPS

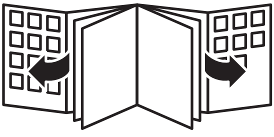

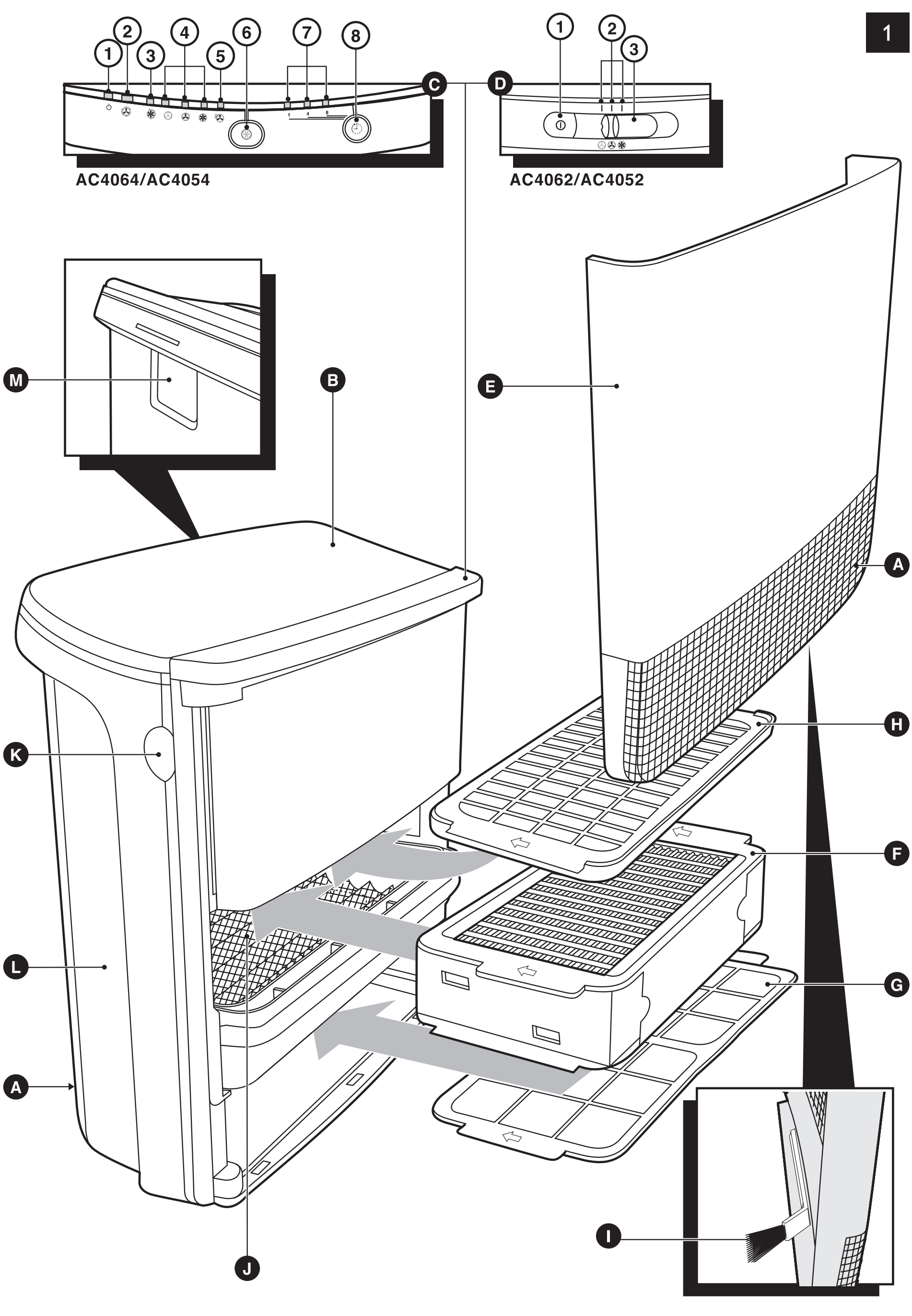
1
1
2
3
4
5
6
7
8
C
AC4064/AC4054
1
2
3
D
AC4062/AC4052
M
B
E
A
K
H
F
L
G
A
I
J

ENGLISH 6
简体中文 14

AC4064, AC4062, AC4054, AC4052

## Introduction

Congratulations on your purchase and welcome to Philips! To fully benefit from the support that Philips offers, register your product at www.philips.com/welcome.
With this new living room air purifier (AC4064/AC4062) or bedroom air purifier (AC4054/AC4052) you breathe cleaner air. For the best results, place the living room air purifier (AC4064/AC4062) or bedroom air purifier (AC4054/AC4052) in a room where you spend most of your time, e.g. the living room or bedroom.
Wherever there are people, plants or pets, there are airborne particles that can affect your well-being, especially if you suffer from allergies. Because of these particles, the air inside a room may be more polluted than the air in a large city.
Normally, particles are invisible and odourless. Nevertheless they can affect your health. The living room air purifier (AC4064/AC4062) or bedroom air purifier (AC4054/AC4052) reduces the amount of viruses, bacteria, animal dander and industrial pollutants in the air, which improves the air quality.

### Filtration in several stages

The living room air purifier (AC4064/AC4062) or bedroom air purifier (AC4054/AC4052) has a unique multi-stage filtration system that ensures the best air quality:
- Stage 1: The pre-filter catches big particles.
- Stage 2: The corona particle charger charges finer particles.
- Stage 3: The ESP particle filter traps charged ultra-fine particles.
- Stage 4: Active oxygen sterilises trapped bacteria and viruses.
- Stage 5: The zeolite gas filter traps a wide range of harmful gases and odours.
- Stage 6: Active oxygen reacts with the zeolite gas filter to clean out the trapped gases and odours, so that the filter rejuvenates.

## General description (Fig. 1)

A Air inlet
B Air outlet
C Control panel AC4064/AC4054
1 Standby light
2 Smart air control light
3 Boost power light
4 Speed lights for low, medium and high speed
5 Air quality indicator
6 Function selection button
7 Timer lights (1, 4 or 8 hours)
8 Timer button
D Control panel AC4062/AC4052
1 On/off button
2 Speed lights for low, medium and high speed
3 Speed selection slide
E Front panel
F ESP particle filter
G Pre-filter
H Zeolite gas filter
I Brush
J Corona particle charger
K Recess
L Body of the appliance
M Handle

## Important

Read this user manual carefully before you use the appliance and save it for future reference.

### Danger

- Do not let water or any other liquid or flammable detergent enter the appliance to avoid electric shock and/or a fire hazard.
- Do not clean the appliance with water or any other liquid or a (flammable) detergent to avoid electric shock and/or a fire hazard.

### Warning

- Check if the voltage indicated on the bottom of the appliance corresponds to the local mains voltage before you connect the appliance.
- If the mains cord is damaged, you must have it replaced by Philips, a service centre authorised by Philips or similarly qualified persons in order to avoid a hazard.
- Do not use the appliance if the plug, the mains cord or the appliance itself is damaged.
- This appliance is not intended for use by persons (including children) with reduced physical, sensory or mental capabilities, or lack of experience and knowledge, unless they have been given supervision or instruction concerning use of the appliance by a person responsible for their safety.
- Children should be supervised to ensure that they do not play with the appliance.
- Do not block the air inlet and outlet, e.g. by placing items on the air outlet or in front of the air inlet.

### Caution

- This appliance is not a substitute for proper ventilation, regular vacuum cleaning or use of an extractor hood or fan while cooking.
- If the wall socket used to power the appliance has poor connections, the plug of the appliance becomes hot. Make sure you plug the appliance into a properly connected wall socket.
- Always place and use the appliance on a dry, stable, level and horizontal surface.
- Leave at least 10cm free space behind and on both sides of the appliance.
- Avoid knocking against the appliance (the air inlet and outlet in particular) with hard objects.
- Always lift or move the appliance by the handle at the back or the handgrips on both sides.
- Do not insert your fingers or objects into the air outlet or the air inlet.
- Do not use this appliance when you have used indoor smoke-type insect repellents or in places with oily residues, burning incense or chemical fumes.
- Do not use the appliance near gas appliances, heating devices or fireplaces.
- Always unplug the appliance after use and before you clean it.
- Do not use the appliance in a room with major temperature changes, as this may cause condensation inside the appliance.
- Do not use the appliance in a room that is larger or smaller than the recommended size. The recommended room size is $6m^2$ up to $20m^2$ for AC4054/AC4052 and $6m^2$ up to $40m^2$ for AC4064/AC4062.
- The appliance is equipped with a safety device. If you have not placed the ESP particle filter, the zeolite gas filter and the front panel properly, you cannot switch on the appliance.
- If the indoor air quality is poor (e.g. due to smoking or cooking or after renovation), we strongly advise you to open windows when you use the appliance to improve the air circulation.
- The appliance is only intended for household use under normal operating conditions.
- Do not use the appliance in wet surroundings or in surroundings with high ambient temperatures, such as the bathroom, toilet or kitchen.
- The appliance does not remove carbon monoxide (CO).

### Electromagnetic fields (EMF)

This Philips appliance complies with all standards regarding electromagnetic fields (EMF). If handled properly and according to the instructions in this user manual, the appliance is safe to use based on scientific evidence available today.

## Before first use

### Placing the zeolite gas filter

The appliance comes with all filters, except the zeolite gas filter, fitted inside.

*Tip: Place the appliance against a wall for more stability when you remove or insert filters.*

*Note: Make sure you insert the filters in the correct position (with the arrow facing upwards).*

*Note: The appliance is equipped with a safety device. If you have not placed the ESP particle filter, the zeolite gas filter and the front panel properly, you cannot switch on the appliance.*

1. Place your fingers in the recesses of the side panels. (Fig. 2)
2. Gently pull the top part of the front panel off the appliance (1) and then lift the panel upwards to remove it (2) (Fig. 3).
3. To remove the ESP particle filter, grab the filter handles on both sides and gently slide the filter out of the appliance. (Fig. 4)
4. Remove all packaging material from the zeolite gas filter and slide the filter into the appliance. (Fig. 5)
   - You can only insert the zeolite gas filter after you have removed the particle filter.
5. To insert the ESP particle filter, slide it into the appliance ('click') (Fig. 6).
6. To reattach the front panel, insert the bottom edge first (1) and then press the top part home (2) (Fig. 7).

## Using the appliance

### AC4064/AC4054

1. Put the plug in the wall socket
   - The standby light goes on (Fig. 8).
2. Press the function selection button one or more times to select the required function and setting (Fig. 9).

The corresponding light goes on and the standby light goes out.

- Smart air control: the built-in air sensor determines the ambient air quality and automatically selects the most appropriate speed. In the first few minutes after you select the Smart air control function, the air quality indicator flashes red to indicate that the air quality sensor is measuring the ambient air quality. After approximately 5 minutes, the air quality indicator lights up green if the air quality is good or lights up red if the air quality is poor (Fig. 10).
- Boost power: the appliance operates at high speed for 30 minutes (Boost power light is on) and then automatically switches to Smart air control (Boost power light goes out and Smart air control light goes on) (Fig. 11).
- Speed: the appliance operates at the speed you select.
  - ✇ = low speed
  - ✇ = medium speed
  - ❀ = high speed

3. To stop the appliance from operating, press the function selection button until the standby light goes on (Fig. 12).

4 Unplug the appliance.

### Timer function

1 Put the plug in the wall socket and select the required function and setting as described above.

2 Press the timer button to set the operating time (1, 4 or 8 hours) (Fig. 13).
The corresponding timer light goes on.
- To deactivate the timer function, press the timer button and keep it pressed until the timer light goes out.
- When the set time has elapsed, the appliance automatically switches to standby mode.

*Note: If you want to stop the air cleaning process before the set time has elapsed, press the function selection button until the standby light goes on.*

### AC4062/AC4052

1 Put the plug in the wall socket

2 Press the on/off button to switch on the appliance.  (Fig. 14)

3 Set the speed slide to the desired speed: low, medium or high (Fig. 15).
- ◎ = low speed
- ✇ = medium speed
- ❀ = high speed
- The corresponding speed light goes on.

4 Press the on/off button to switch off the appliance and unplug the appliance.

## Cleaning and maintenance

Always unplug the appliance before you clean it.

Do not let water or any other liquid or flammable detergent enter the appliance to avoid electric shock and/or a fire hazard.

Do not clean the appliance with water or any other liquid or a (flammable) detergent to avoid electric shock and/or a fire hazard.

### Body of the appliance

Regularly clean the inside and outside of the body to prevent dust from collecting on the inside and outside.

1 Wipe away dust with a dry, soft cloth from the body of the appliance.

2 Clean the air inlet and the air outlet with a dry soft cloth.

### Corona particle charger

Never touch the corona particle charger with your fingers. Always clean the corona particle charger with the special soft cleaning brush, which is stored in the front panel.

Be extra careful when you clean the corona particle charger: the wires are very fragile.

1 Take the soft cleaning brush out of the front panel.

2 Pass the brush gently along the top and bottom of the corona particle charger.

### ESP particle filter and zeolite gas filter

1. Remove the filters from the appliance (see chapter 'Filter replacement', section 'Removing the filters').

2. Remove visible dirt with a vacuum cleaner.

### Pre-filter

1. Clean the pre-filter with a vacuum cleaner.

## Filter replacement

The lifetime of the filters is substantially shortened by exposure to tabacco smoke:

| number of cigarettes per day | estimated lifetime of filters |
|---|---|
| 0 - 1 | up to 5 years |
| 5 - 10 | up to 6 to 12 months |
| 20 | up to 3 - 6 months |

### ESP particle filter

- In case of normal household use in a non-smoking environment and in case of proper maintenance (see chapter 'Cleaning and maintenance'), the particle filter lasts approx. 5 years.
- To check if you have to replace the ESP particle filter you have to remove the front cover and pull out the ESP particle filter with two hands (Fig. 4).
- Turn the ESP particle filter upside down (Fig. 16).
- Check the pollution between the layers and judge which pollution level applies. Only replace filter in case pollution bridges two layers. (Fig. 17)
- A new ESP particle filter is available under the following type numbers:
  - AC4107 for bedroom air purifier AC4054/AC4052
  - AC4108 for living room air purifier AC4064/AC4062

### Zeolite gas filter

In case of normal household use in a non-smoking environment and in case of proper maintenance (see chapter 'Cleaning and maintenance'), the zeolite gas filter lasts up to 5 years.

*Note: You may need to replace the zeolite gas filter sooner in case of more extreme usage conditions (smoking environment, just renovated room, non-domestic use etc.) and insufficient maintenance.*

- Replace the zeolite gas filter when you have to replace the ESP particle filter.
- A new zeolite gas filter is available under the following type numbers:
  - AC4117 bedroom air purifier AC4054/AC4052
  - AC4118 for living room air purifier AC4064/AC4062

### Removing the filters

*Tip: Place the appliance against a wall for more stability when you remove or insert filters.*

1. Place your fingers in the recesses of the side panels. Gently pull the top part of the front panel off the appliance (1) and then lift the panel upwards to remove it (2) (Fig. 3).

2. To remove the ESP particle filter, grab the filter handles at both sides and gently slide the filter out of the appliance. (Fig. 4)

3. To remove the zeolite gas filter, slide it out of the appliance (Fig. 18).

*Note: You can only remove the zeolite gas filter after you have removed the ESP particle filter.*

4 To remove the pre-filter, slide it out of the appliance (Fig. 19).

### Inserting the filters

*Tip: Place the appliance against a wall for more stability when you remove or insert filters.*

*Note: Make sure you insert the filters in the correct position (with the arrow facing upwards).*

*Note: The appliance is equipped with a safety device. If you have not placed the ESP particle filter, the zeolite gas filter and the front panel properly, you cannot switch on the appliance.*

1 Slide the zeolite gas filter into the appliance.  (Fig. 5)

2 Slide the ESP particle filter into the appliance (Fig. 6).

3 Slide the pre-filter into the appliance.  (Fig. 20)

4 To reattach the front panel, insert the bottom edge first (1) and then press the top part home (2) (Fig. 7).

## Guarantee and service

If you need information or if you have a problem, please visit the Philips website at **www.philips.com** or contact the Philips Consumer Care Centre in your country (you find its phone number in the worldwide guarantee leaflet). If there is no Consumer Care Centre in your country, go to your local Philips dealer.

## Environment

- Do not throw away the appliance with the normal household waste at the end of its life, but hand it in at an official collection point for recycling. By doing this, you help to preserve the environment (Fig. 21).

## Troubleshooting

This chapter summarises the most common problems you could encounter with the appliance. If you are unable to solve the problem with the information below, contact the Consumer Care Centre in your country.

| Problem | Solution |
|---|---|
| The selected function/ time mode doesn’t work. | The appliance may be in standby mode or may be switched off. |
| The appliance doesn’t work. | There may be a connection problem. Check if the plug is inserted in the wall socket properly. |
| | The appliance may not be switched on. AC4064/AC4054: press the function selection button. AC4062/AC4052: press the on/off button. |
| | The ESP particle filter or the front panel may not be placed properly. Reinsert the filters and reattach the front panel. |
| | The zeolite gas filter is not placed yet. Insert the filter and reattach the front panel. |
| | If you have performed the above checks and the appliance still does not work, it may be malfunctioning. Unplug the appliance and take it to your Philips dealer or an authorised Philips service centre. |

| Problem | Solution |
|---|---|
| The clean air doesn't come smoothly out of the air outlet | The pre-filter may be clogged. Clean the pre-filter (see chapter 'Cleaning and maintenance'). |
| | Perhaps you forgot to remove the plastic wrapper of a new filter. Remove the plastic wrapper before you switch on the appliance again. |
| | The air inlet or outlet may be blocked by external objects. Remove the object that blocks the air inlet or outlet. |
| | Clean the filters and the corona particle charger (see chapter 'Cleaning and maintenance'). If this does not help, unplug the appliance and take it to your Philips dealer or an authorised Philips service centre. |
| The odours are not removed properly. | The zeolite gas filter may be dirty or may have reached the end of its life. Clean the zeolite gas filter (see chapter 'Cleaning and maintenance') or replace it (see chapter 'Filter replacement'). |
| | Perhaps you use the appliance in a room in which the ambient air quality is very poor. In that case, open windows to improve the air circulation. |
| | Perhaps you use the appliance in a room that is much bigger than the room size the appliance is intended for. Put the appliance in a smaller room. The recommended room size is $6m^2$ up to $20m^2$ for AC4054/ AC4052 and $6m^2$ up to $40m^2$ for AC4064/AC4062. |
| The dust particles are not removed properly. | The ESP particle filter may have reached the end of its life. Check the colour of the ESP particle filter (see chapter 'Filter Replacement'). If necessary, replace the filter. |
| | Perhaps you use the appliance in a room that is much bigger than the room size the appliance is intended for. Put the appliance in a smaller room. The recommended room size is $6m^2$ up to $20m^2$ for AC4054/ AC4052 and $6m^2$ up to $40m^2$ for AC4064/AC4062. |
| The fans do not work, even though the appliance is plugged in and switched on. | The appliance may be malfunctioning. Switch off the appliance and unplug it. Take the appliance to your Philips dealer or an authorised Philips service centre. |
| The appliance produces an unusual noise (e.g. a hissing, sizzling or crackling noise) during operation. | The pre-filter may be clogged. Clean the pre-filter (see chapter 'Cleaning and maintenance'). |
| | Perhaps you forgot to remove the plastic wrapper of a new filter. Remove the plastic wrapper before you switch on the appliance again. |
| | The air inlet or outlet may be blocked by external objects. Remove the object that blocks the air inlet or outlet. |
| | The appliance may be malfunctioning. Switch off the appliance and unplug it. Take the appliance to your Philips dealer or an authorised Philips service centre. |

| Problem | Solution |
|---|---|
| | Perhaps the mesh of the corona particle charger is not clean. Clean the corona particle charger (see chapter 'Cleaning and maintenance'). |
| The appliance produces a burning smell during operation | The appliance may be malfunctioning. Switch off the appliance and unplug it. Take the appliance to your Philips dealer or an authorised Philips service centre. |
| The appliance gives off an unusual smell during operation. | In case of an unusual smell, contact an authorised Philips service centre. |
| The corona particle charger is still dirty after I have cleaned it with the soft cleaning brush. | This is not a problem. By brushing the top and bottom of the corona particle charger, you remove enough dirt to make it work properly again.Never touch the corona particle charger with your hands. Always clean the corona particle charger with the special soft cleaning brush, which is stored in the front panel. Be extra careful when you clean the corona particle charger: the wires are very fragile. |
| The appliance produces sparks during operation. | Sometimes small sparks may be produced in the corona particle charger. This is quite normal and the result of moisture in the air. |

## 产品简介

感谢您的惠顾，欢迎光临飞利浦！为了您能充分享受飞利浦提供的支持，请注册您的产品，网址为 www.philips.com/welcome。
有了这款全新的空气净化器持久净化系列包括 起居室空气净化器 (AC4064/AC4062) 或卧室空气净化器 (AC4054/AC4052)，您可以呼吸到更洁净的空气。为获得至佳效果，请将该起居室空气净化器 (AC4064/AC4062) 或卧室空气净化器 (AC4054/AC4052) 放置在您停留时间最长的处所，例如起居室或卧室。
有人、植物或宠物的地方，空气中就会有悬浮颗粒。空气中的悬浮颗粒可能影响您的健康，如果您患有过敏症，则尤其如此。由于这些悬浮颗粒的存在，房间内的空气污染可能比大城市的室外空气污染更严重。
正常情况下，微粒是不可见的，而且没有味道。然而它们可能影响您的呼吸。起居室空气净化器 (AC4064/AC4062) 或卧室空气净化器 (AC4054/AC4052) 可有效减少空气中的病毒、细菌、动物皮屑以及工业污染物，从而改善空气质量。

### 多重过滤

起居室空气净化器 (AC4064/AC4062) 或卧室空气净化器 (AC4054/AC4052) 具有独特的多重过滤系统，可保证至佳的空气质量:
- 第 1 重：预过滤网滤除空气中的较大颗粒。
- 第 2 重：电场粒子极化系统将微小颗粒电极化。
- 第 3 重：静电沉淀过滤网捕捉带电的微小颗粒。
- 第 4 重：活性氧对捕捉到的细菌和病毒进行杀灭。
- 第 5 重：沸石气体过滤网吸附多种有害气体和异味。
- 第 6 重：活性氧与沸石气体过滤网反应，清洁捕捉到的有害气体和异味，使气体过滤网效能持久卓越。

## 一般说明 (图 1)

A 进风口
B 出风口
C 控制面板 AC4064/AC4054
1 待机指示灯
2 智能空气测控指示灯
3 特级强风功能指示灯
4 低速、中速和高速的速度指示灯
5 空气质量指示
6 功能选择按钮
7 定时器指示灯（1、4 或 8 小时）
8 预约按钮
D 控制面板 AC4062/AC4052
1 开/关按钮
2 低速、中速和高速的速度指示灯
3 风速设置
E 前面板
F 静电沉淀过滤网
G 预过滤网
H 沸石气体过滤网
I 清洁刷
J 电场粒子极化系统
K 凹陷
L 产品机身
M 手柄

## 注意事项

使用产品之前，请仔细阅读本用户手册，并妥善保管以供日后参考。

### 危险

- 切勿让水或任何其它液体或易燃性清洁剂进入产品，以免发生触电和（或）火灾。
- 切勿用水或任何其它液体或（易燃性）清洁剂来清洁产品，以免发生触电和（或）火灾。

### 警告

- 在将产品接通电源以前，首先确认产品底部所标示的电压是否与当地的电压相符。
- 如果电源软线损坏，为了避免危险，必须由制造商、其维修部或类似部门的专业人员来更换。
- 如果插头、电源线或产品本身受损，请勿使用本产品。
- 本产品非设计为由肢体不健全、感觉或精神上有障碍或缺乏相关经验和知识的人（包括儿童）使用，除非有负责他们安全的人对他们使用本产品进行监督或指导。
- 应照看好儿童，确保他们不玩耍该产品。
- 请勿堵塞进风和出风口，例如不要将物体放置在出风口上或进风口前方。

### 注意

- 本产品不能替代正常通风、日常吸尘或者在烹饪时使用的抽油烟机。
- 如果连接产品的电源插座接触不良，则产品的插头会发热。确保您所连接的插座接触良好。
- 一定要在干燥、稳固、平整且水平的表面上放置和使用本产品。
- 产品的后侧及两侧均要留出至少 10 厘米的空间。
- 请勿用硬物敲击本产品（尤其是进风口和出风口）。
- 拿起或移动本产品时，应使用后面或两侧的手柄。
- 请勿将手指或其他任何物体插入出风口或进风口。
- 当您使用室内喷雾式驱虫剂或在充满易燃气体的地方时，请勿使用本产品。
- 请勿在气体用具、加热装置或火炉附近使用本产品。
- 使用之后和清洁产品前，务必先将电源插头拔掉。
- 请勿在温度变化较大的房间内使用本产品，因为这可能导致产品内部的冷凝。

- 请勿在超过或不到建议大小的房间内使用本产品。建议的房间大小：AC4054/AC4052 为 6 平方米至 20 平方米，AC4064/AC4062 为 6 平方米至 40 平方米。
- 产品配有安全装置。如果您没有正确放置静电沉淀过滤网、沸石气体过滤网和前面板，则将无法启动本产品。
- 如果室内空气质量不佳（例如，吸烟、烹饪或者刚装修过），则我们强烈建议您在使用本产品时打开窗户促进空气流通。
- 本产品仅限于家用并在正常运行条件下使用。
- 请勿在潮湿环境或高温环境中（例如浴室、卫生间或厨房）使用本产品。
- 本产品不可消除一氧化碳 (CO)。建议的房间面积是AC4054/AC4052 最大 20 平米，AC4064/AC4062 最大 40 平米。

### 电磁场 (EMF)

这款飞利浦产品符合关于电磁场 (EMF) 的相关标准。据目前的科学证明，如果正确使用并按照本用户手册中的说明进行操作，本产品是安全的。

## 初次使用之前

### 安装沸石气体过滤网

本产品内部安装了除沸石气体过滤网以外的所有过滤网。

提示： 在取下或插入过滤网之前，请将产品靠墙摆放以使其更稳固。

注意： 确保将过滤网安装到正确的位置（箭头朝上）。

注意： 产品配有安全装置。如果您没有正确放置静电沉淀过滤网、沸石气体过滤网和前面板，则将无法启动本产品。

1 请将您的手指放在侧面板的凹陷处。 (图 2)

2 轻轻将前面板的顶部从产品上拉下 (1) 然后向上抬起并取下面板 (2)。 (图 3)

3 要取下静电沉淀过滤网，可握住过滤网两侧的手柄，轻轻将过滤网拉出机身。 (图 4)

4 拆除沸石气体过滤网的所有包装材料，然后将过滤网滑入机身内。 (图 5)
◗ 只有在卸下静电沉淀过滤网之后，才可以安装沸石气体过滤网。

5 要安装静电沉淀过滤网，可将其滑入到机身内（可听到“咔哒”声）。(图 6)

6 要重新安装前面板，可首先插入前面板的底边 (1) 然后将顶部按动到位 (2)。(图 7)

## 使用本产品

### AC4064/AC4054

1 将插头插入电源插座
◗ 待机指示灯亮起。(图 8)

2 按动功能选择按钮一次或多次，可选择需要的功能和设置。 (图 9)
相应的指示灯将亮起，待机指示灯将熄灭。
◗ 智能空气测控功能：内置空气传感器可确定周围空气质量并自动选择最适合的速度。在您选择智能空气测控功能之后几分钟内，空气质量指示灯将呈红色闪烁，说明空气

质量传感器正在测定周围空气的质量。大约 5 分钟过后，如果空气质量优，则空气质量指示灯将亮起呈绿色；如果空气质量差，则空气质量指示灯将亮起呈红色。 (图 10)

- 特级强风功能：产品可高速运转 30 分钟（特级强风功能指示灯亮起）然后自动切换到智能空气测控（特级强风功能指示灯熄灭，智能空气测控指示灯亮起）。 (图 11)
- 速度：产品按照您选择的速度运行。
  - = 低速
  - = 中速
  - = 高速

3 要让产品停止运行，按动功能选择按钮，直到待机指示灯亮起。 (图 12)

4 拔掉产品插头。

### 计时器功能

1 将插头插入插座，如上所述选择所需要的功能和设置。

2 按计时器按钮设置工作时间（1、4 或 8 小时）。 (图 13)
相应的计时器指示灯亮起。

- 解除计时器功能，可按住计时器按钮，直到计时器指示灯熄灭。
- 当超过设定的时间之后，产品将自动切换到待机模式。

注意： 如果要在未达到设定时间之前终止机器工作，可以按住功能选择按钮，直到待机指示灯亮起。

## AC4062/AC4052

1 将插头插入插座

2 按 on/off 开关按钮启动产品。 (图 14)

3 将风速设置设定到想要的速度：低、中或高。 (图 15)

- = 低速
- = 中速
- = 高速
- 相应的速度指示灯亮起。

4 按 on/off 开关按钮关闭产品并拔下产品电源。

# 清洁和保养

清洁产品前，务必先将电源插头拔掉。

切勿让水或任何其它液体或易燃性清洁剂进入产品，以免发生触电和（或）火灾。

切勿用水或任何其它液体或（易燃性）清洁剂来清洁产品，以免发生触电和（或）火灾。

## 产品机身

定期清洁机身的内侧和外侧可防止灰尘积聚在内侧和外侧。

1 用柔软干燥的布料将灰尘从产品的机身上擦去。

2 使用干燥的软布清洁进风口和出风口。

## 电场粒子极化系统

切勿用手指触摸电场粒子极化系统。必须用存放在前面板上的特制清洁软刷来清洁电场粒子极化系统。

清洁电场粒子极化系统时必须格外小心：电线非常脆弱。

1 从前面板中取出清洁软刷。

2 用刷子轻柔地擦拭电场粒子极化系统的顶部和底部。

## 静电沉淀过滤网和沸石气体过滤网

1 从产品取下过滤网（见“更换过滤网”一章的“取下过滤网”一节）。

2 用真空吸尘器去除可见的灰尘。

## 预过滤网

1 使用真空吸尘器清洁预过滤网。

# 更换过滤网

吸烟会严重影响滤网的使用寿命：

| 每日抽烟支数 | 滤网的预计使用寿命 |
|---|---|
| 0 - 1 | 长达 5 年 |
| 5 - 10 | 最多 6 至 12 个月 |
| 20 | 最多 3 至 6 个月 |

## 静电沉淀过滤网

- 在无烟环境中供家庭正常使用以及正确保养（见“清洁和保养”一章）的情况下，静电沉淀过滤网可持续使用大约 5 年。
- 要检查是否需要更换静电沉淀过滤网，您必须卸下前盖，用双手拉出静电沉淀过滤网。 (图 4)
- 倒置静电沉淀过滤网。 (图 16)
- 检查过滤层之间的污染物，判断污染程度。仅在两层之间有污染物时更换过滤网。 (图 17)
- 新的静电沉淀过滤网提供下列型号：
  - AC4107 适用于卧室空气净化器 AC4054/AC4052
  - AC4108 适用于起居室空气净化器 AC4064/AC4062

## 沸石气体过滤网

在无烟环境中供家庭正常使用并且正确保养（见“清洁和保养”一章）的情况下，沸石气体过滤网可持续使用长达 5 年。

注意： 如果在极端条件下（吸烟环境、新装修的房间、非家庭使用，等等）使用且保养不当，则需要在更短时间内更换沸石气体过滤网。

- 需要更换静电沉淀过滤网时，应更换沸石气体过滤网。
- 新的沸石气体过滤网提供下列型号：
  - AC4117 适用于卧室空气净化器 AC4054/AC4052
  - AC4118 适用于起居室空气净化器 AC4064/AC4062

## 取下过滤网

提示： 在取下或插入过滤网之前，请将产品靠墙摆放以使其更稳固。

1 请将您的手指放在侧面板的凹陷处。轻轻将前面板的顶部从产品上拉下 (1) 然后向上抬起并取下面板 (2)。 (图 3)

2 要取下静电沉淀过滤网，可握住过滤网两侧的手柄，轻轻将过滤网拉出机身。 (图 4)

3 要拆下沸石气体过滤网，请将其从机身拉出。 (图 18)

注意： 只有在卸下静电沉淀过滤网之后，才可以卸下沸石气体过滤网。

4 要拆下预过滤网，请将它从产品拉出。 (图 19)

## 装入过滤网

提示： 在取下或插入过滤网之前，请将产品靠墙摆放以使其更稳固。

注意： 确保将过滤网安装到正确的位置（箭头朝上）。

注意： 产品配有安全装置。如果您没有正确放置静电沉淀过滤网、沸石气体过滤网和前面板，则将无法启动本产品。

1 将沸石气体过滤网滑入机身内。 (图 5)

2 将静电沉淀过滤网滑入机身内。 (图 6)

3 将预过滤网插入机身内。 (图 20)

4 要重新安装前面板，可首先插入前面板的底边 (1) 然后将顶部按动到位 (2)。 (图 7)

# 保修和服务

如果您需要了解信息，或者有任何疑问，请访问飞利浦网站：www.philips.com。您也可与您所在地的飞利浦顾客服务中心联系（可从全球保修卡中找到其电话号码）。如果您的所在地没有飞利浦顾客服务中心，则可以与当地的飞利浦经销商联系。

# 环境

- 弃置产品时，请不要将其与一般生活垃圾堆放在一起；应将其交给官方指定的回收中心。这样做有利于环保。 (图 21)

# 故障种类和处理方法

本章归纳了使用本产品时最可能遇到的问题。如果您无法根据下面的信息解决问题，请与贵国（地区）的飞利浦客户服务中心联系。

| 问题 | 解决方法 |
|---|---|
| 选定的功能/时间模式不起作用。 | 产品可能处于待机模式或已关闭电源。 |
| 产品不能启动。 | 可能存在连接问题。检查插头是否正确插入了插座。 |
| | 产品可能没有打开电源。AC4064/AC4054： 按功能选择按钮。AC4062/AC4052： 按开关按钮。 |
| | 静电沉淀过滤网或前面板可能没有放置妥当。请重新装入过滤网并重新安装前面板。 |
| | 没有放入沸石气体过滤网。请装入过滤网并装回前面板。 |

| 问题 | 解决方法 |
|---|---|
| | 如果已执行上述检查但产品依然无法使用，则可能是出现了故障。请拔下产品电源插头，将其送往当地的飞利浦经销商或经授权的飞利浦维修中心。 |
| 出风口不能顺畅地送出清新空气 | 预过滤网可能已阻塞。清洁预过滤网（见“清洁和保养”一章）。 |
| | 可能您忘记了拆除新过滤网的塑料包装。请在重新打开本产品之前开启塑料包装。 |
| | 进风口或出风口可能被外界物体挡住。请移开阻挡了进风口或出风口的物体。 |
| | 清洁过滤网和电场粒子极化系统（见“清洁和保养”一章）。如果这没有解决问题，请拔下产品的电源插头，将其送往当地的飞利浦经销商或经授权的飞利浦维修中心。 |
| 去除异味的效果不佳。 | 沸石气体过滤网可能脏了，或已达到使用寿命。清洁沸石气体过滤网（见“清洁和保养”一章）或加以更换（见“更换过滤网”一章）。 |
| | 可能是使用本产品的房间空气质量非常差。在这种情况下，请打开窗户促进空气流通。 |
| | 可能您使用本产品的房间远远超过了该产品原本容许的房间大小。请将本产品放在较小的房间内。建议的房间大小：AC4054/AC4052 为 6 平方米至 20 平方米，AC4064/AC4062 为 6 平方米至 40 平方米。 |
| 去除灰尘颗粒的效果不佳。 | 静电沉淀过滤网可能已达到使用寿命。检查静电沉淀过滤网的颜色（见“更换过滤网”一章）。如果必要，请更换过滤网。 |
| | 可能您使用本产品的房间远远超过了该产品原本容许的房间大小。请将本产品放在较小的房间内。建议的房间大小：AC4054/AC4052 为 6 平方米至 20 平方米，AC4064/AC4062 为 6 平方米至 40 平方米。 |
| 即使接通并打开了产品电源，风扇依然不运转。 | 产品可能存在故障。请关闭产品电源并拔下插头。将本产品送往当地的飞利浦经销商或经过授权的飞利浦维修中心。 |
| 产品在操作过程中发出异常的声音（各种噪音）。 | 预过滤网可能已阻塞。清洁预过滤网（见“清洁和保养”一章）。 |
| | 可能您忘记了拆除新过滤网的塑料包装。请在重新打开本产品之前开启塑料包装。 |
| | 进风口或出风口可能被外界物体挡住。请移开阻挡了进风口或出风口的物体。 |
| | 产品可能存在故障。请关闭产品电源并拔下插头。将本产品送往当地的飞利浦经销商或经过授权的飞利浦维修中心。 |
| | 可能是电场粒子极化系统的滤网不干净。请清洁电场粒子极化系统（见“清洁和保养”一章）。 |

| 问题 | 解决方法 |
|---|---|
| 产品在操作过程中发出烧焦的气味 | 产品可能存在故障。请关闭产品电源并拔下插头。将本产品送往当地的飞利浦经销商或经过授权的飞利浦维修中心。 |
| 产品在操作过程中发出异味。 | 如果产品发出异味，请与经授权的飞利浦维修中心联系。 |
| 用清洁软刷清洁之后，电场粒子极化系统仍然很脏。 | 这不是问题。刷过电场粒子极化系统的顶部和底部之后，即已除去足够的脏污，它可以回到正常的工作状态。切勿用手触摸电场粒子极化系统。一定要用特制的清洁软刷来清洁，清洁刷存放在前面板上。清洁电场粒子极化系统时必须格外小心：电线非常脆弱。 |
| 产品在操作过程中产生火花。 | 有时，电场粒子极化系统中会产生一些小火花。这是正常现象，它是由空气中的湿气导致的。 |

**PHILIPS**

产品 : 飞利浦空气净化器
型号 : AC4052
额定电压 : 220V～
额定频率 : 50Hz
额定输入功率: 34 W
生产日期 : 请见产品底部
产地 : 中国

珠海经济特区飞利浦家庭电器有限公司
中国珠海市三灶镇琴石工业区
邮政编码：519040
全国顾客服务热线: 4008 800 008

本产品根据国标GB4706.1-2005,GB4706.45-2008制造

**PHILIPS**

产品 : 飞利浦空气净化器
型号 : AC4054
额定电压 : 220V～
额定频率 : 50Hz
额定输入功率: 34 W
生产日期 : 请见产品底部
产地 : 中国

珠海经济特区飞利浦家庭电器有限公司
中国珠海市三灶镇琴石工业区
邮政编码：519040
全国顾客服务热线: 4008 800 008

本产品根据国标GB4706.1-2005,GB4706.45-2008制造

**PHILIPS**

产品 : 飞利浦空气净化器
型号 : AC4062
额定电压 : 220V～
额定频率 : 50Hz
额定输入功率: 61 W
生产日期 : 请见产品底部
产地 : 中国

珠海经济特区飞利浦家庭电器有限公司
中国珠海市三灶镇琴石工业区
邮政编码：519040
全国顾客服务热线: 4008 800 008

本产品根据国标GB4706.1-2005,GB4706.45-2008制造

**PHILIPS**

产品 : 飞利浦空气净化器
型号 : AC4064
额定电压 : 220V～
额定频率 : 50Hz
额定输入功率: 61 W
生产日期 : 请见产品底部
产地 : 中国

珠海经济特区飞利浦家庭电器有限公司
中国珠海市三灶镇琴石工业区
邮政编码：519040
全国顾客服务热线: 4008 800 008

本产品根据国标GB4706.1-2005,GB4706.45-2008制造

请妥善保管本使用说明书

发行日期：2010/05/30

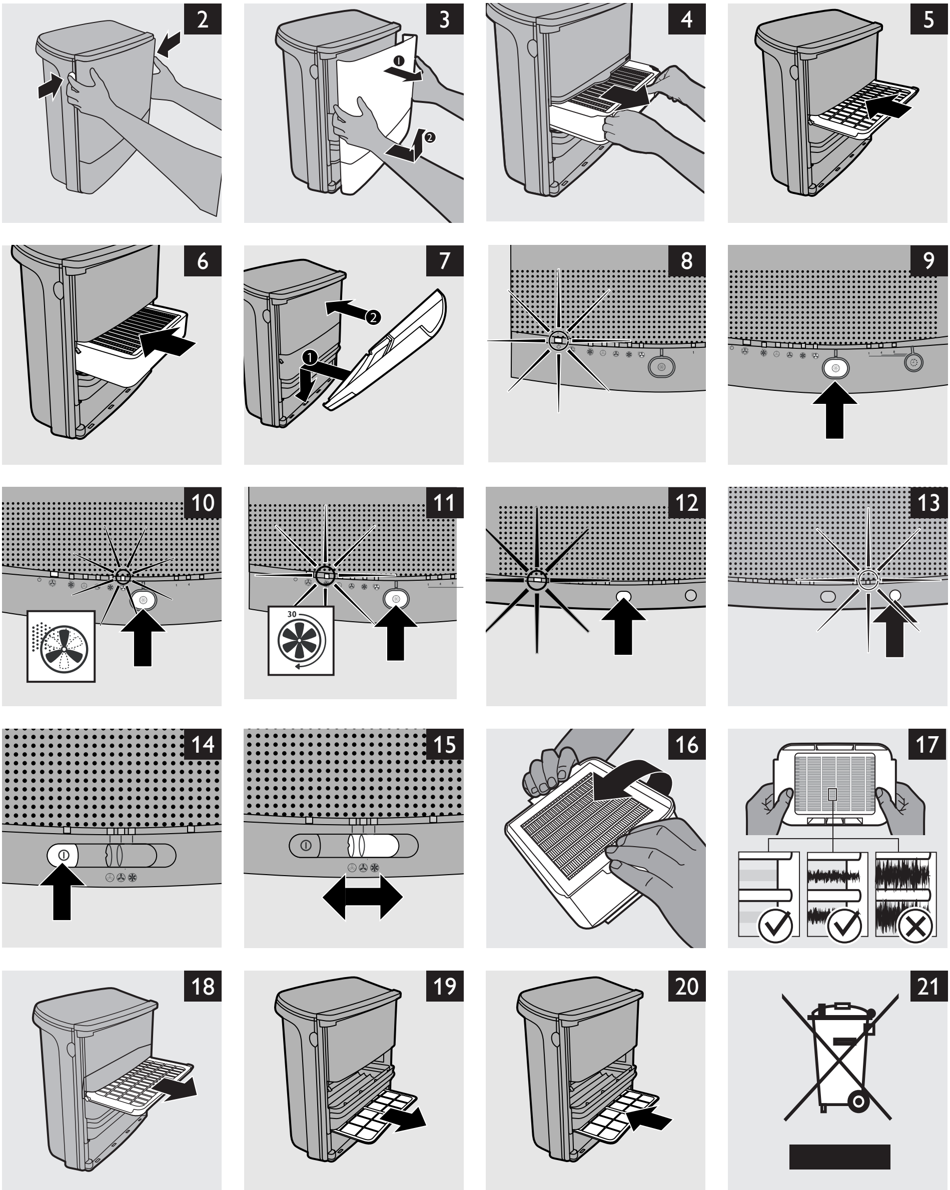
2
3
4
5
6
7
8
9
10
11
30
12
13
14
15
16
17
18
19
20
21

PHILIPS

www.philips.com

100% recycled paper
100% papier recyclé

4222.000.9323.8